NO. 4H-733

THIS DRAWING AND THE INFORMATION CONTAINED THEREIN IS THE PROPERTY OF NORDBERG MANUFACTURING COMPANY AND MAY NOT BE USED WITHOUT THE WRITTEN CONSENT OF NORDBERG.

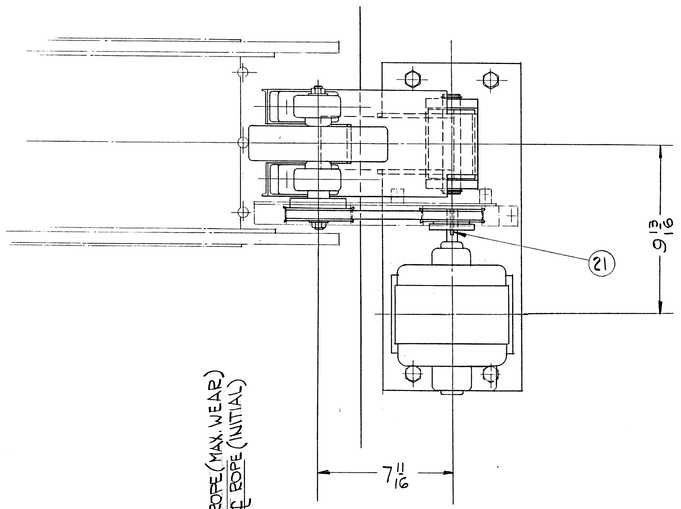

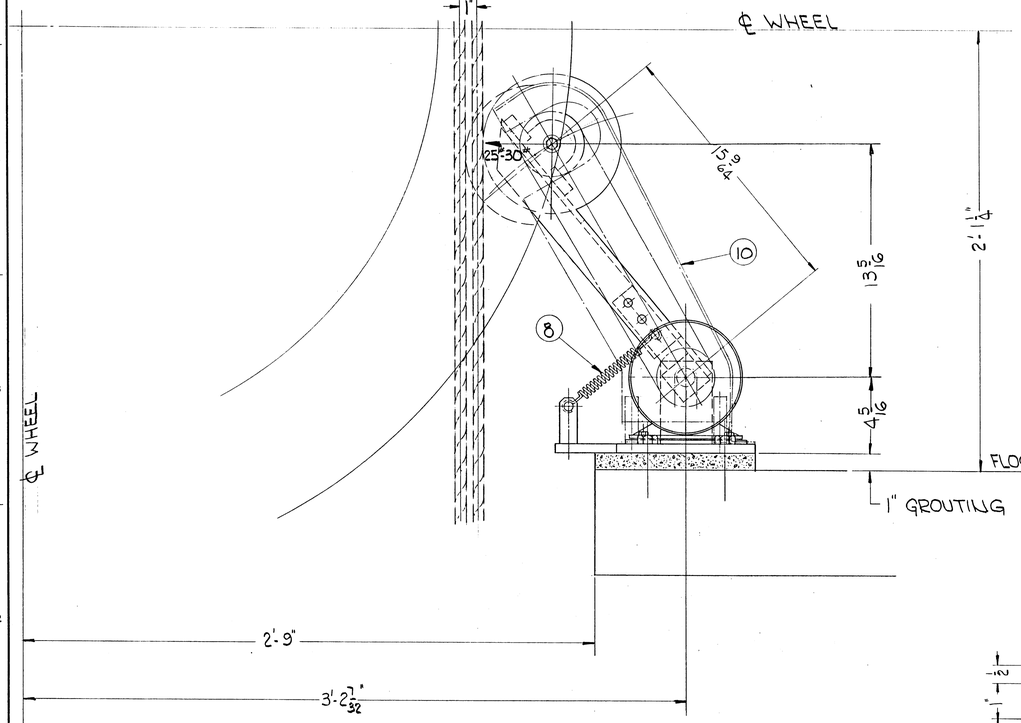

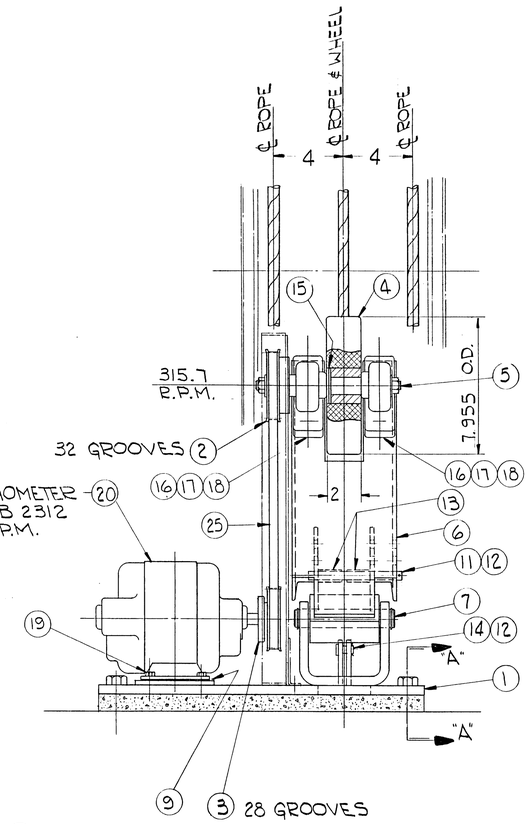

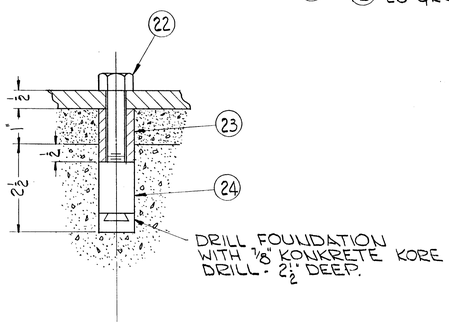

SECTION "A-A"
SCALE 6"=1'-0"

NO. REQ.	NAME OF PART	ITEM NO.	DWG. NO.	PART CODE NO. OR PART NO.	MATERIAL MAT'L CODE NO.	REMARKS OR PATT. NO.	FIN. WGT. LBS. EACH
1	DETECTOR BASE	1	3H-1076				
1	PULLEY	2	H-1573				
1	PULLEY	3	H-1572				
1	WHEEL ASSEMBLY	4	H-1556				
1	PULLEY SHAFT	5	2H-1606				
1	BRACKET	6	2H-1605				
1	PIN	7	H-207				
1	SPRING M 260	8	FB-107-U	3661814			
2	1/8" LAMINATED SHIM	9	H-503				
1	GEAR GUARD	10	3H-1077				
1	PIN 1/2" x 5 5/8"	11		3331862			
3	COTTER PIN 1/8" x 7/8"	12		3070313			
2	SPACER - 3/4" TUBE - 11GA.	13			0550532	1 1/4" LONG.	
1	CLEVIS PIN	14		3302383			
2	1" SAE WASHER	15		3060500			
2	1" PILLOW BLOCK	16		5398004			
4	3/8"-16 x 1 1/4" HEX. HEAD CAPSCREW	17		2774791			
4	3/8" SAE WASHER	18		3060470			
4	5/16"-18 x 1" HEX. HEAD CAPSCREW	19		2774531			
1	G.E. TACHOMETER	20				GEN. ELECTRIC SEE P.O. 5BC 44 AB 2312 A1G 80140	
1	3/16" x 3/16" x 1 1/2" FEATHER KEY	21		3350063			
4	1/2"-13 x 2 3/4" HEX. HEAD CAPSCREW	22		2775336			
4	SPACER 1/2" STD. PIPE	23			0502035	1 1/2" LONG	
4	1/2"-13 ACKERMAN ANCHOR	24		3170341			
1	TIMING BELT	25	3/8" PITCH x 1/2" WIDE			MAUREY 420 L 050	

SPECIFICATION FOR 1 SET

REF: 4H-727

REV.	DESCRIPTION OF CHANGE	LOCATION	BY DATE	CHANGE ORDER NO.

ORDER NO. | SETS

1 SETS	U.S. SMELTING USED FOR	7030 1112 ORD. NO.	REMARKS

NORDBERG MFG. CO. MILWAUKEE, WIS.

SCALE 3"=1'-0" TOLERANCE ON FINISHED DIMENSIONS IS ±.015" UNLESS OTHERWISE SPECIFIED

FINISHED SYMBOLS ARE ROOT MEAN SQUARE DEVIATIONS FROM MEAN SURFACE

125 V FINISH ON ALL FINISHED SURFACES EXCEPT AS OTHERWISE SPECIFIED.

DRAWN CMP	DATE 9-21-65	CHECKED RGL	DATE 10-1-65
TRACED	DATE	APPROVED RGL	DATE 10-1-65
SUPERSEDES DWG. NO.		SUPERSEDED BY DWG. NO.	
PRODUCT MINE HOIST		ASSEMBLY DWG. NO.	
COMMODITY CLASSIFICATION			

TITLE
JAMMED CONVEYANCE DETECTOR ASSEMBLY

DWG. SIZE IV | DWG. NO. 4H-733 | REV.

PART CODE NO GROUP-28

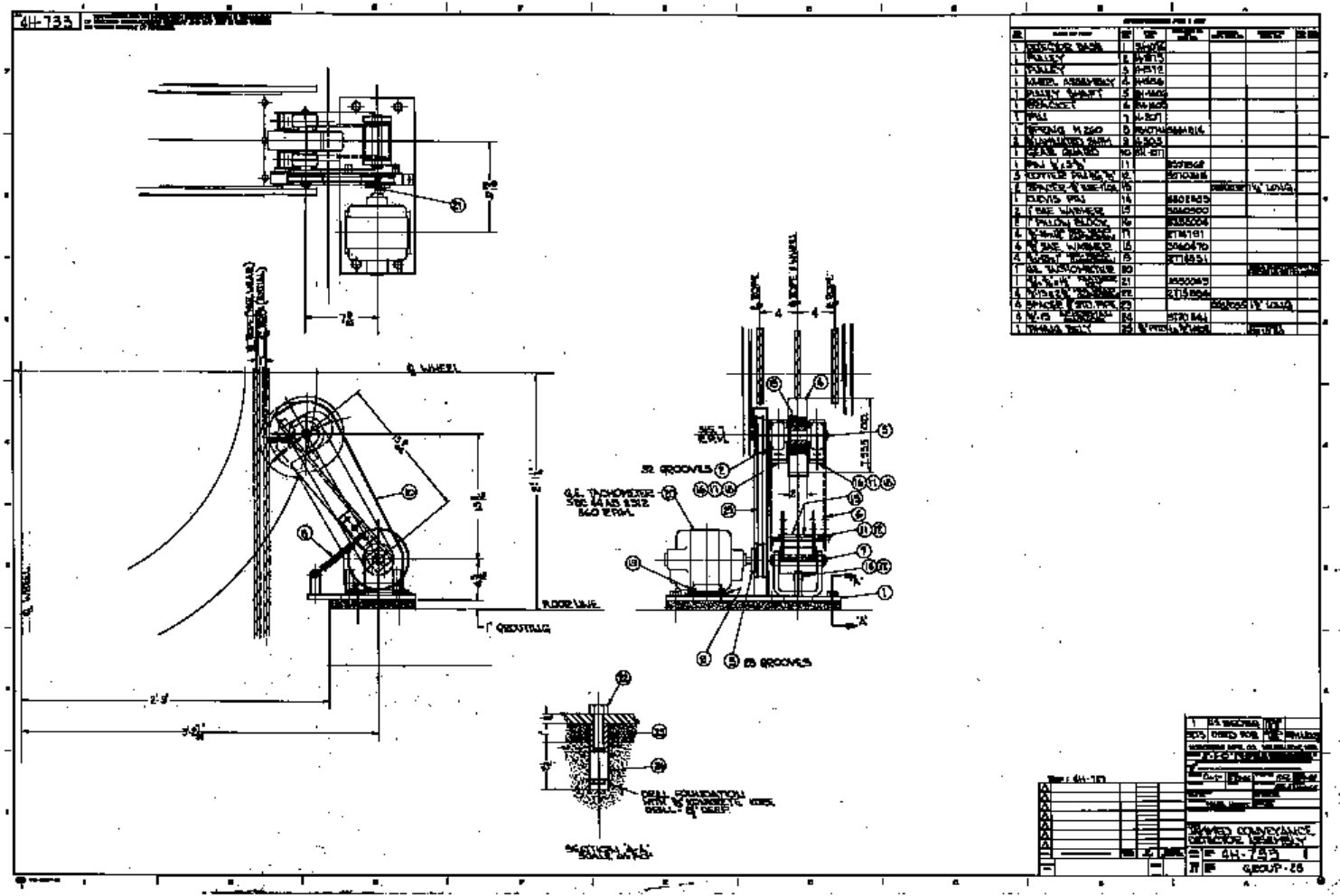
4H-733
℄ WHEEL
FLOOR LINE
1" GROUTING
32 GROOVES
G.E. TACHOMETER
23 GROOVES
DRILL FOUNDATION
SECTION "A-A"
SCALE 1/4"=1'-0"
SHIMED CONVEYANCE
DETECTOR ASSEMBLY
4H-733
GROUP-26